SCOPE ITEMS (SEQ. #900)

SPIRAL STAIR (SHOP PRIMER)
REF. : A2.71, S2.07D, S2.07R, S2.09D, I2.97 & I3.06

MATERIALS SPECIFICATION

STRINGER: 3/8" THK. PLATE BUILT-UP SECTION
METAL PAN: 12 GA METAL PAN
PICKETS: 3/4X3/4 SQUARE BARS

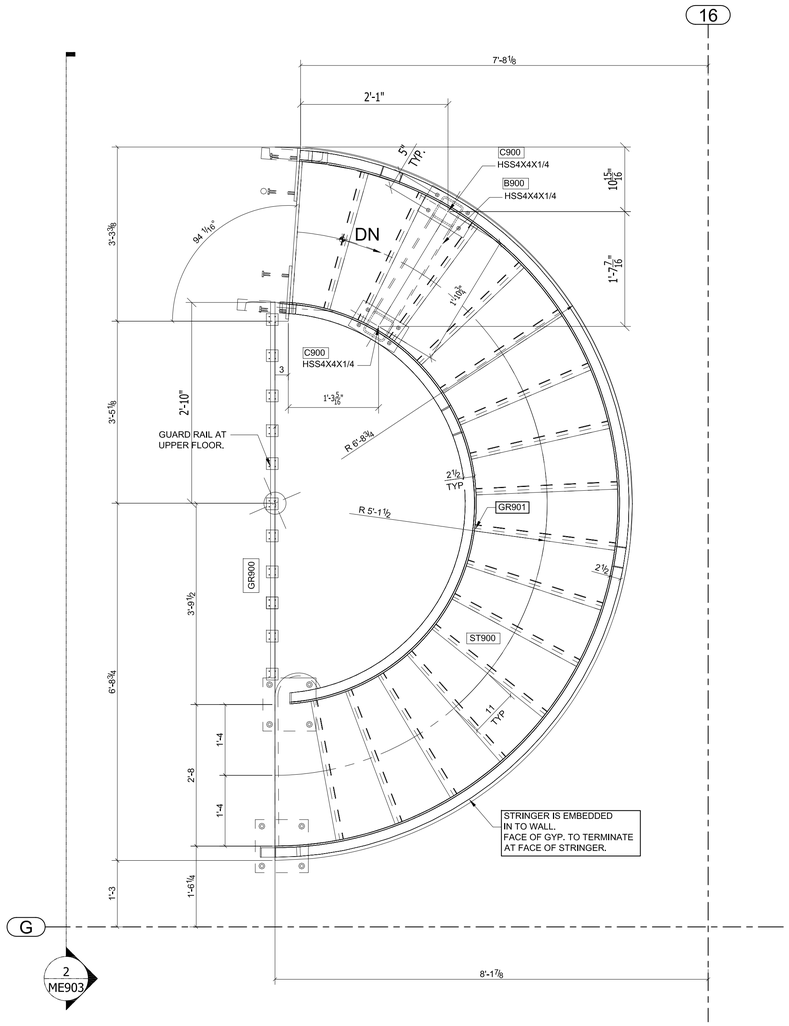

1 SPIRAL STAIR FRAMING PLAN
SCALE: 1:16

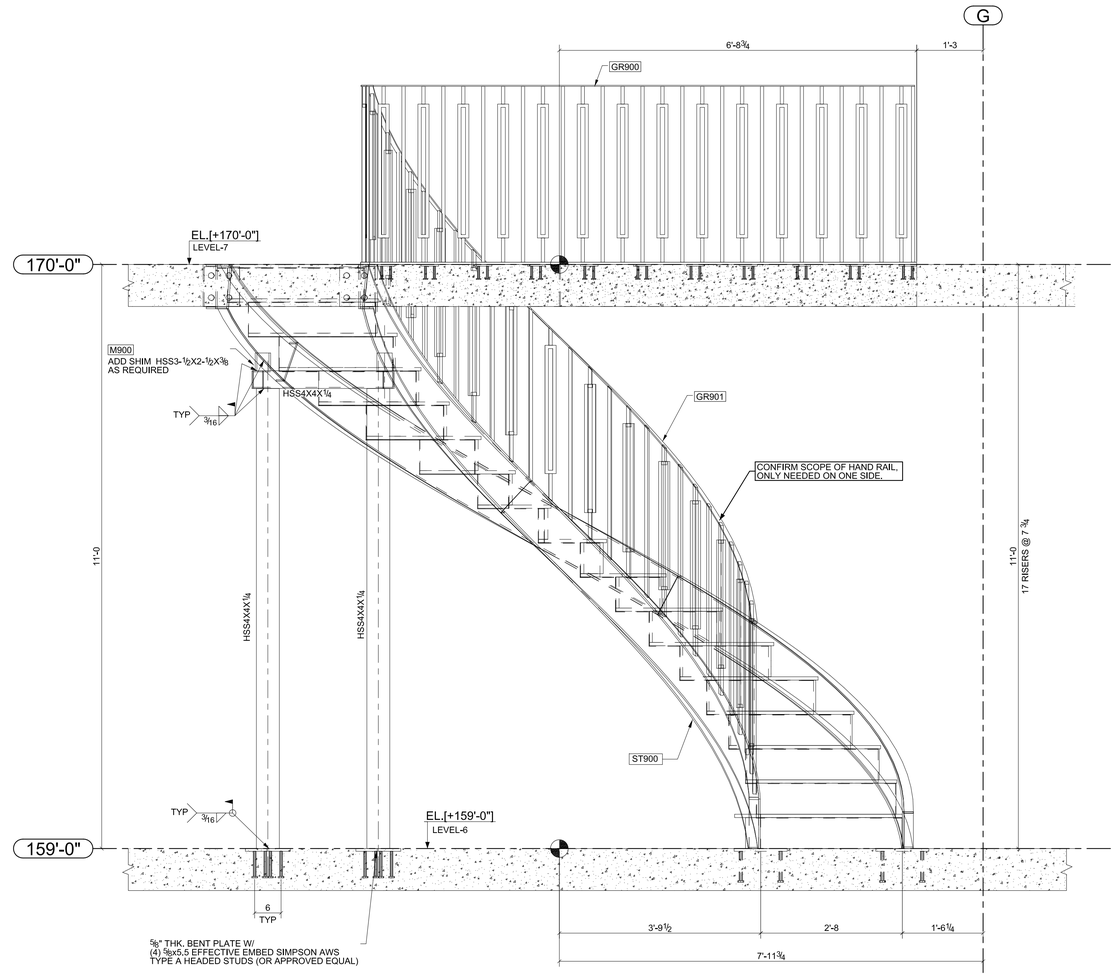

2 SPIRAL STAIR SECTIONAL ELEVATION
SCALE: 1:16

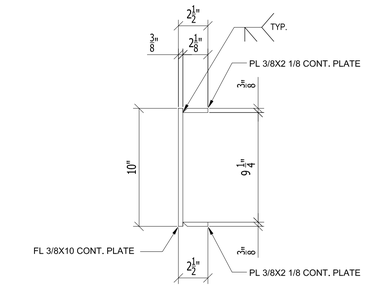

STRINGER BUILT-UP SECTION

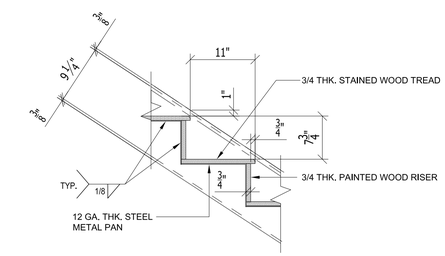

5 TYPICAL TREAD DETAIL
SCALE: 1:1

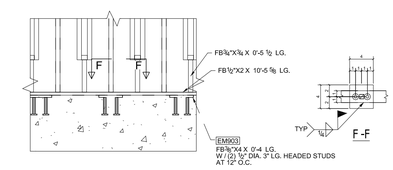

8 TYPICAL RAILING DETAIL AT CONCRETE SLAB
SCALE: 1:1

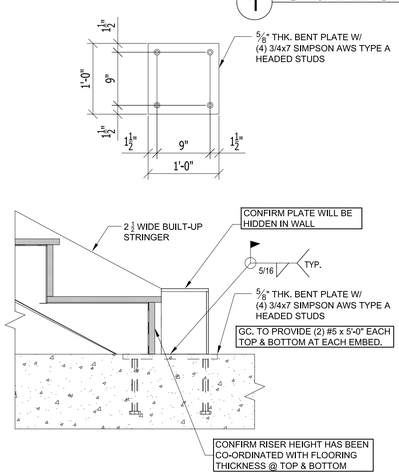

3 STAIR BASE CONNECTION
SCALE: 1:9

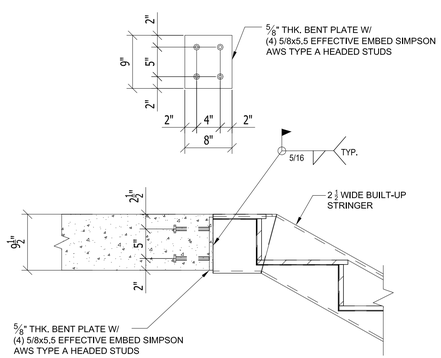

4 STRINGER TO SLAB CONN.
SCALE: 1:9

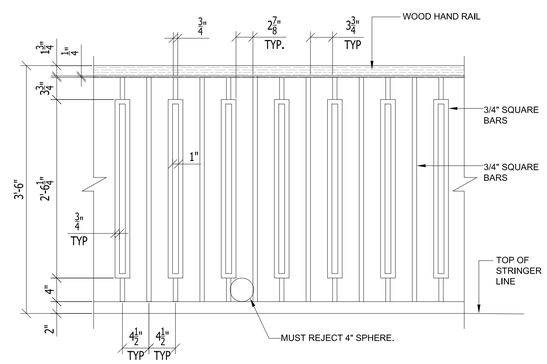

6 TYPICAL GUARD RAIL DETAIL
SCALE: 1:1

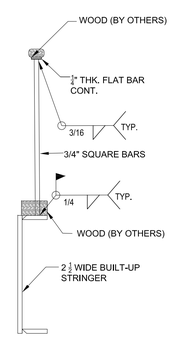

7 TYPICAL RAIL DETAIL

Tekla Structures