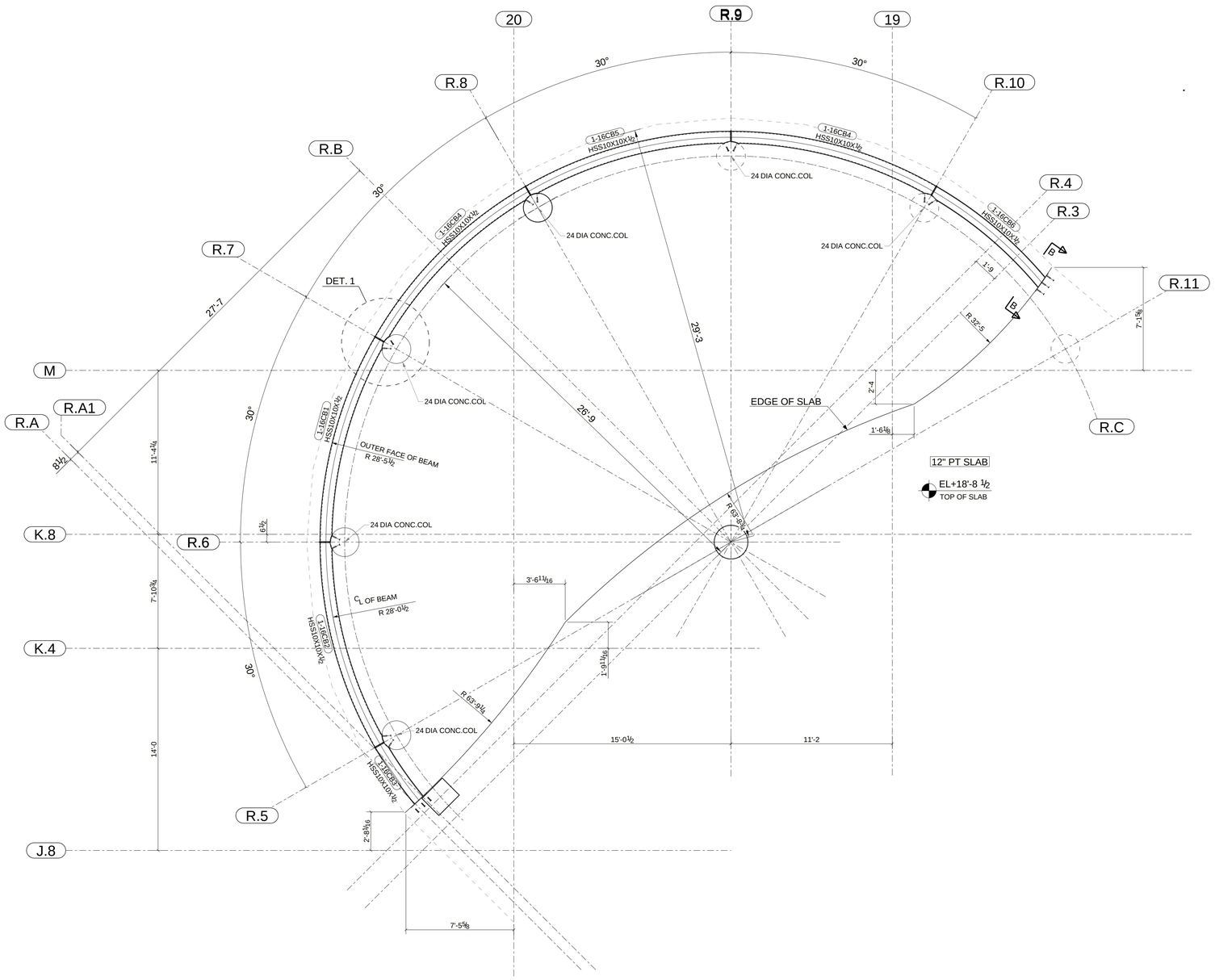

1 SIGNATURE TOWER FRAMING PLAN-LEVEL 01

TOP OF STEEL = +18'-7 ½"
T.O.S. INDICATES TOP OF STEEL

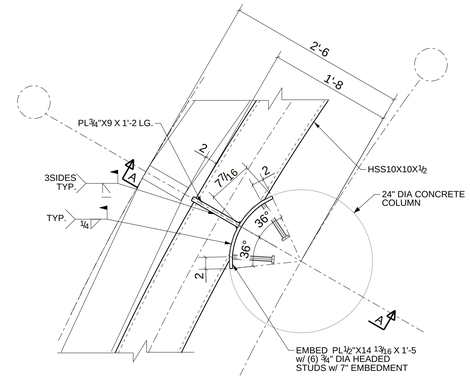

1 DETAIL

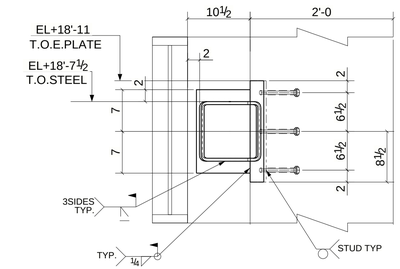

A SECTION

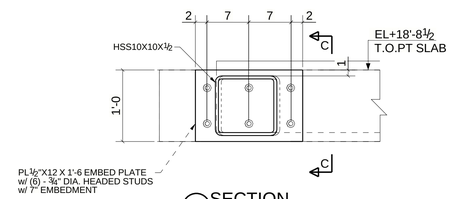

B SECTION

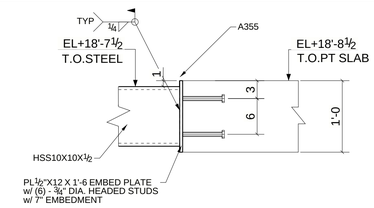

C SECTION

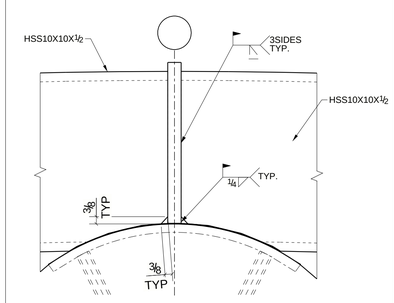

TYPICAL WELDING DETAIL

Tekla Structures