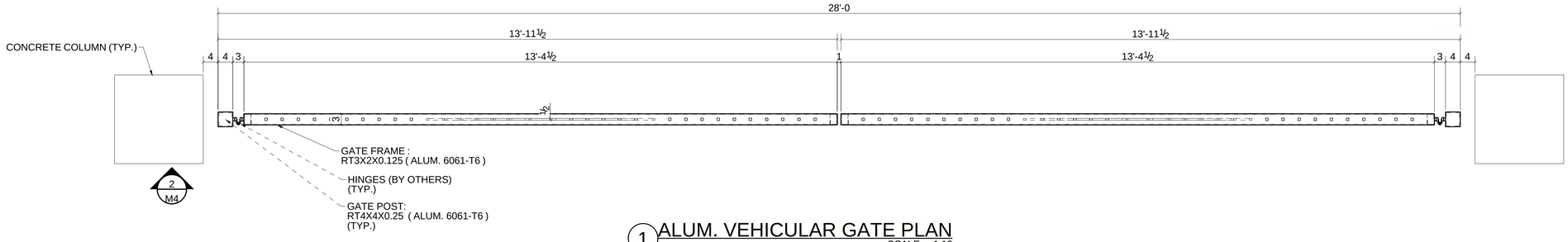

1 ALUM. VEHICULAR GATE PLAN

SCALE = 1:16

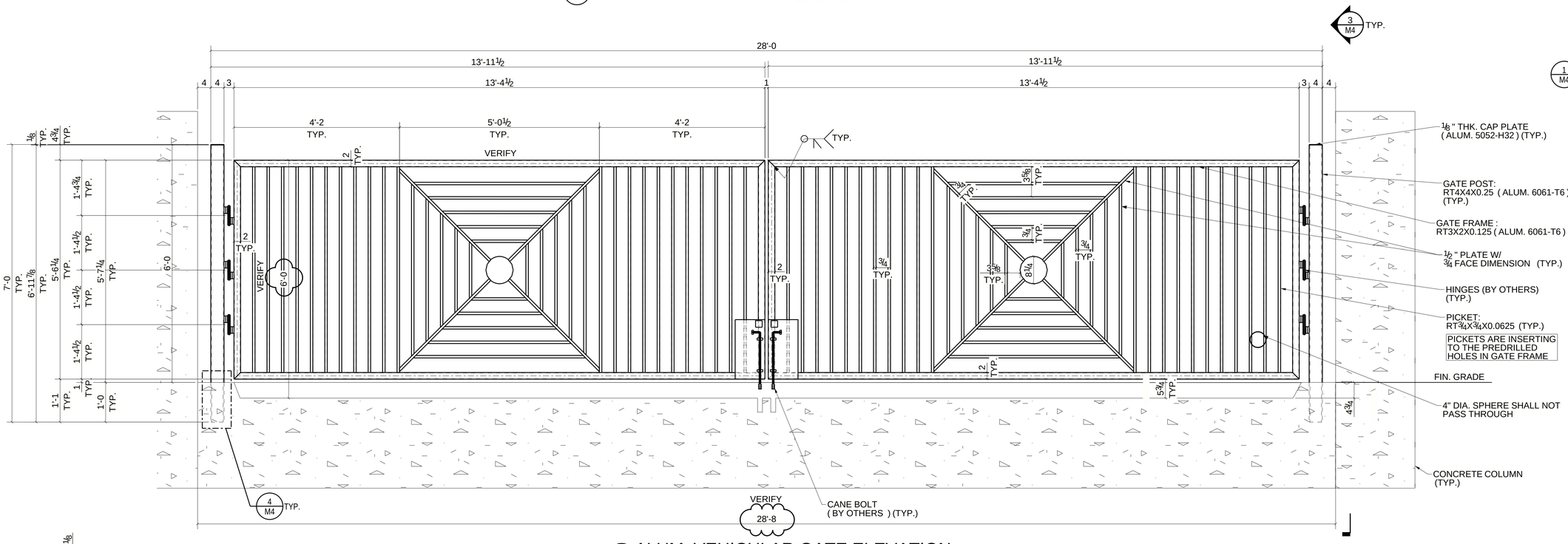

2 ALUM. VEHICULAR GATE ELEVATION

SCALE = 1:16

(REQ'D QTY. ~ 3 NOS.)

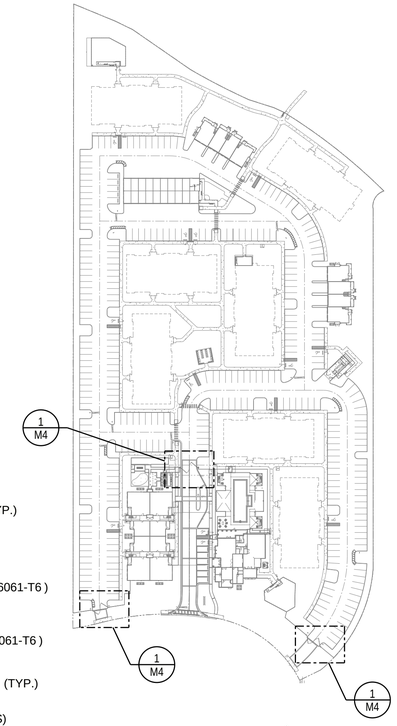

KEY PLAN

ALL MATERIALS ARE ALUMINUM POWDER COATED BLACK OR DARK BRONZE (6063 - T52) (U.N.O)

FIELD VERIFY ALL DIMENSIONS AND ELEVATION PRIOR TO ANY FABRICATION & ERECTION

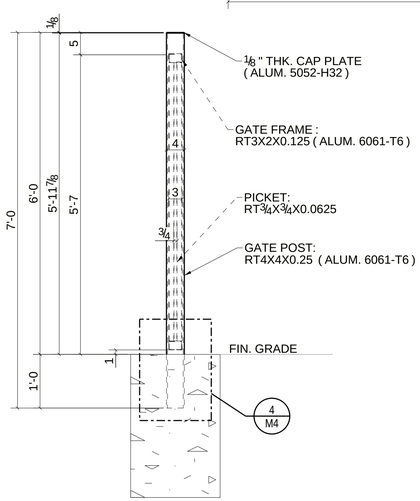

3 TYP. GATE SECTION

SCALE : 1:16

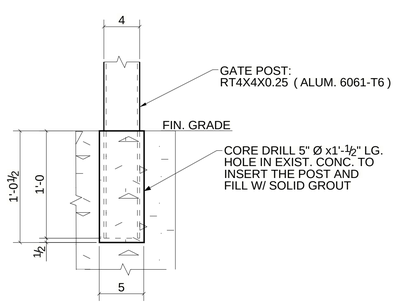

4 TYP. POST BOTTOM CONN.

SCALE 1:8

Tekla Structures