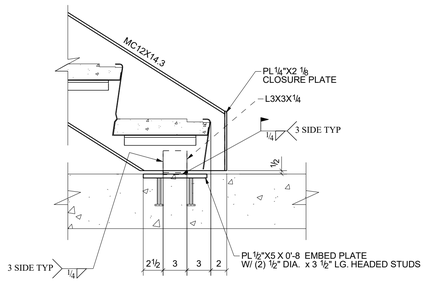

1 STAIR BASE CONNE.
SCALE: 1:9

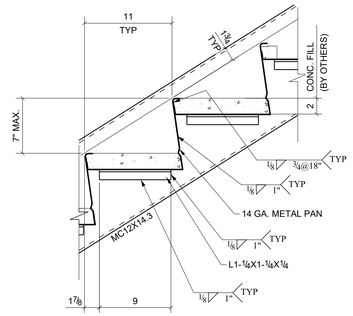

2 TYPICAL TREAD DETAIL
SCALE: 1:9

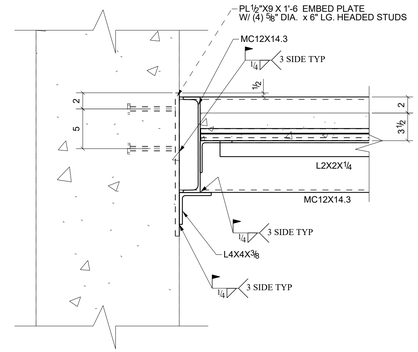

3 TYPICAL SECTION DETAIL
SCALE: 1:9

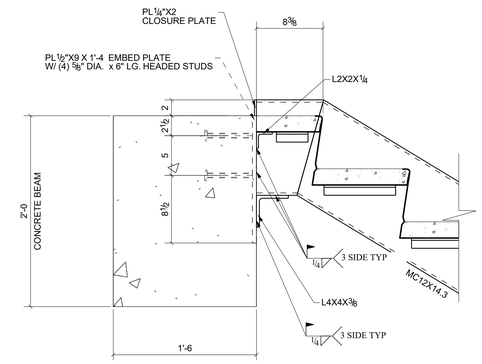

4 TYPICAL SECTION DETAIL
SCALE: 1:9

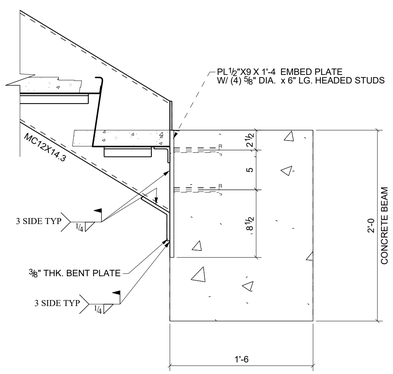

5 TYPICAL SECTION DETAIL
SCALE: 1:9

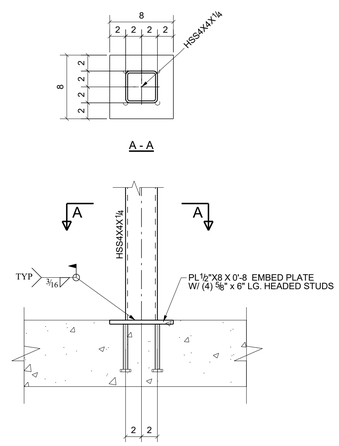

6 POST BASE CONNE.
SCALE: 1:9

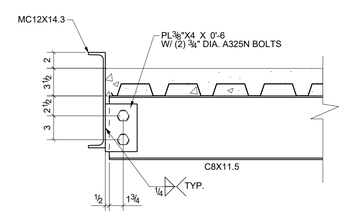

7 CHANNEL TO STRINGER CONNE.
SCALE: 1:9

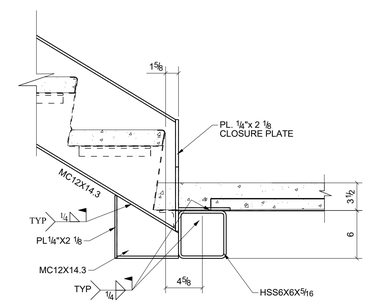

8 TYP. STRINGER TO HEADER CONNE.
SCALE: 1:9

ALL STEEL MATERIALS SHALL BE SHOP PRIMED

MATERIAL SPECIFICATION - STAIR (STEEL)

STRINGER = MC12x14.3
TREAD PAN = 14GA. METAL Z PAN
HEADER = C10x20 / HSS6x6x5/16
LANDING SUPPORT = C8x11.5
LANDING = 1.5B 20GA METAL DECK (GALV.)

MATERIAL SPECIFICATION - RAILING (STEEL)

RAILING POST = 1 ½"x 1 ½" x ¼ STEEL TUBE
HORIZONTAL RAIL = 1 ½"x 1 ½" x ¼ STEEL TUBE
VERTICAL PICKETS = ¾" SQUARE STEEL BAR
HAND RAIL = 1 ½" x ⅛" THK. STEEL TUBE

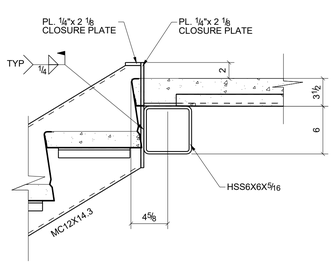

9 TYP. STRINGER TO HEADER CONNE.
SCALE: 1:9

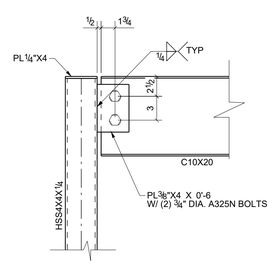

10 CHANNEL TO POST CONNE.
SCALE: 1:9

TITLE BLOCK

Tekla structures